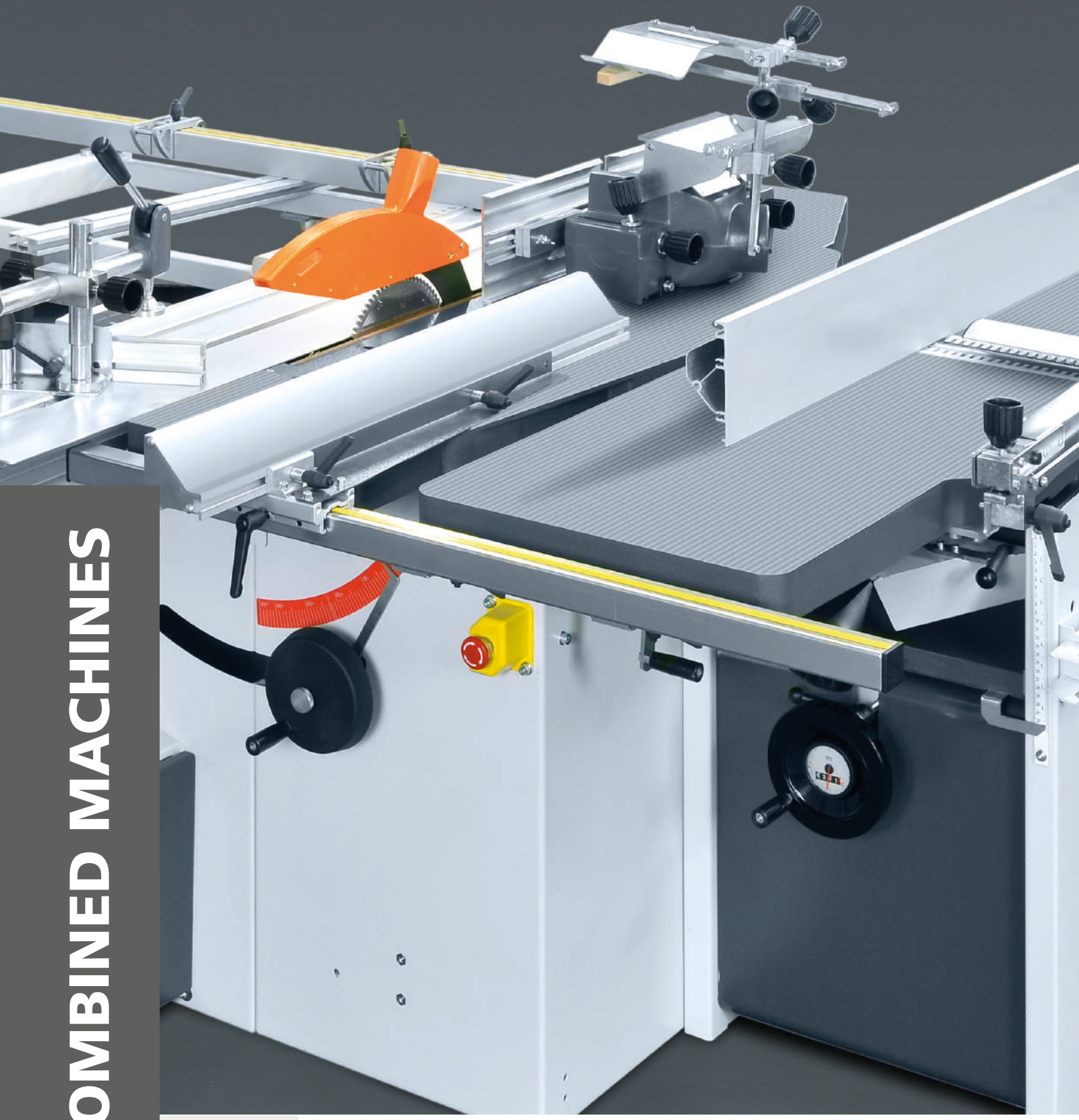

COMBINED MACHINES

English

ROBLAND®

MADE IN BELGIUM

TABLE OF CONTENTS

About Robland ..... 3 - 5

HX260 6

HX310 PRO 7

NX310 PRO 8

NX410 PRO 9

NLX310 PRO 10

NLX410 PRO 11

XSD310 12

NXSD310 13

NXSD410 14

HXTZ 15

NXTZ 16

NLXTZ 17

Strengths ..... 18 - 19

Options 20

Accessories ..... 21 - 22

LBM 23

Selection criteria ..... 24 - 25

Robland machines overview ..... 26 - 27

Disclaimer & contact details 28

MADE IN BELGIUM

SINCE 1968

ROBLAND is a privately owned Belgian company, that was founded in 1968 by Robert Landuyt. The first successes were achieved by building affordable qualitative universal woodworking machines, a large part of which are still in use today.

We do have all resources and competencies in house for product development, parts manufacturing, product assembly, sales and after sales support.

With our state of the art, highly automated, parts manufacturing machines we are able to remain cost effective while manufacturing in Belgium near the historical city of Bruges. Although our machines will last for years, this is not enough for us. A quality service and after sales support is key to ROBLANDs success. As we manufacture all machine parts ourselves, you can rely on spare parts always being rapidly available.

Our company mission is to offer woodworking machines with the best quality/price ratio to the high end Do-It-Yourself market and to the small and medium-sized enterprise market.

Our product portfolio, aimed at the second wood processing, includes panel saws, table saws, universal machines, planers, thicknessers, spindle moulders, horizontal mortisers, a semi-automatic boring machine, a CNC boring machine, edgebanders and dust extraction systems.

We have an international dealer network and currently export over 85% of our production worldwide to more than 100 countries. In its 20.000 m² large factory ROBLAND employs over 80 people.

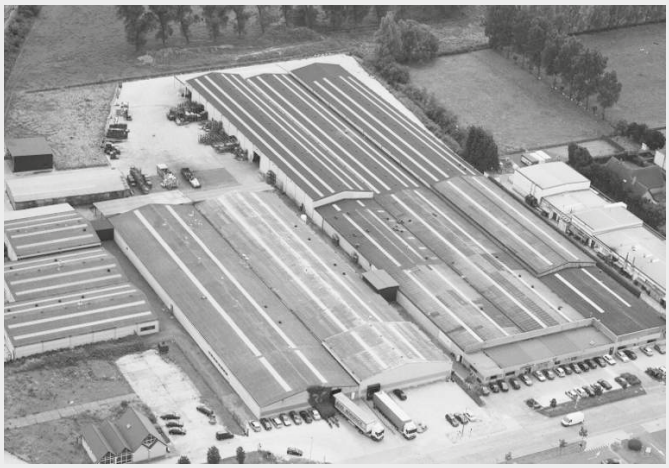

2018
50th anniversary
Introduction new line of panel saws

2015
Installation of Robot for machine (un)loading
Introduction of NLX410

2012
Introduction of BM3000, ROBLAND's first CNC machine

2011
Introduction of the PS series of panelsaws
Introduction of the Edgebanders

2008
Introduction of Axis Ergo
Extension of the factory to 20.000m²
Introduction of HX- and NX-Series

2006
Introduction of motorised panelsaw NZ3200

2005
Introduction of the S510 planer

2004
New welding hall in factory

2002
Introduction of NLX-Series and D630 thicknesser

2000
Introduction of E300, small panelsaw

1997
Installation of a welding robot

1996
Introduction of ROBLAND planer-thicknesser SD510

1995
First ROBLAND spindle-moulder T120

1992
Introduction of first panelsaw, Z320

1991
Installation of a 6 pallet automated machine center

1989
Installation of lasercutter and automatic lathe for parts manufacturing

1987
Introduction of the X-Series universals

1985
Introduction of the C-Series universals

1978
Relocation of the factory to its actual site

1976
First sales overseas

1972
Commercialisation of first universal machine K210

1968
ROBLAND founded by Robert Landuyt

PRODUCTION

Steel plate laser cutting

Computer assisted steel plate bending

Welding of frame

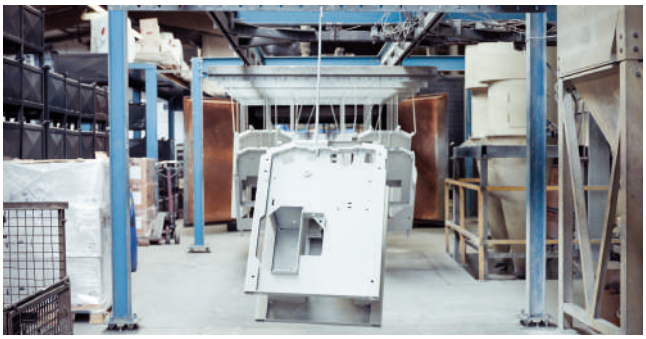

Powder coating

Milling of sliding table surface

Surface scraping of cast iron table

Surface scraping of cast iron table

Raw steel bars

Machining parts

Machining parts

SUBASSEMBLY

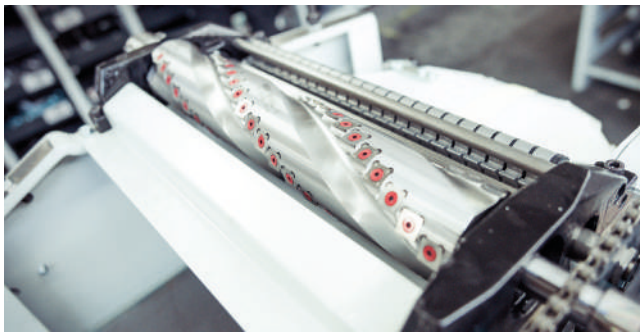

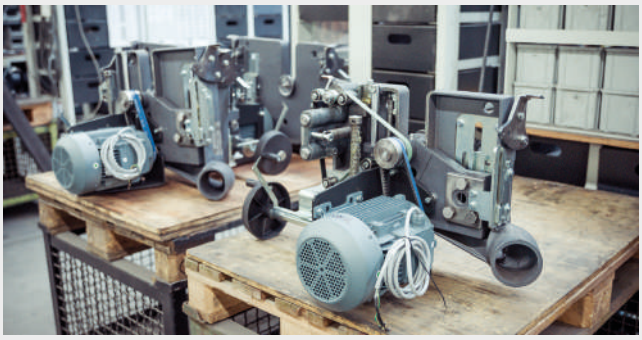

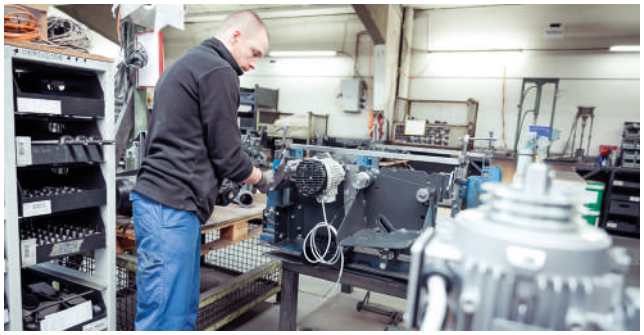

ASSEMBLY

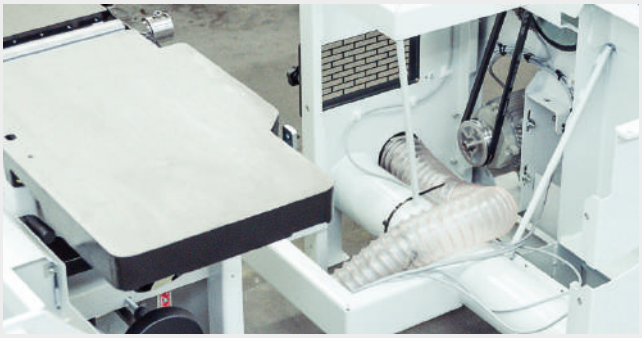

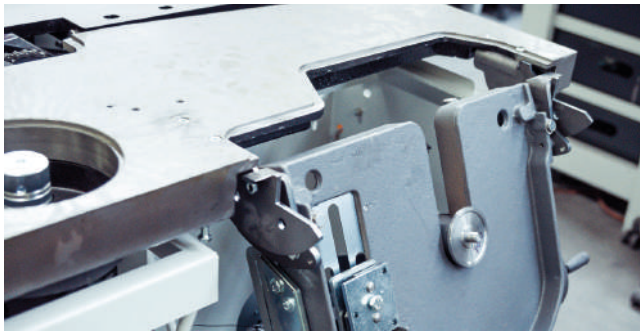

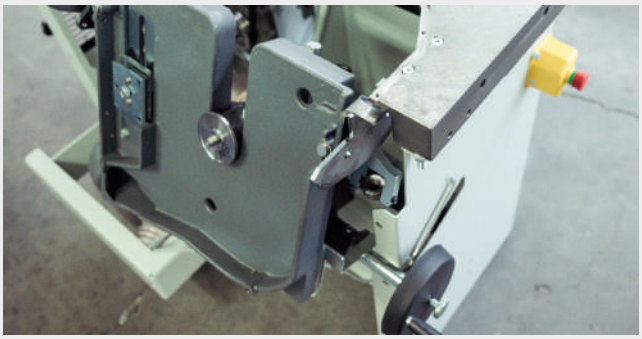

LEVELLING AND ALIGNMENT

HX260

HX260 with options

HX260 Technical Data

Weight	485 kg
Voltage	230 V Mono / 230 V - 3 Phase
	400 V - 3 Phase
Dust suction outlet	100 mm
	+ 60mm on sawguard
Saw	
Saw rotation speed	4500 RPM
Diameter saw blade and bore	250 x 30 mm
Cutting depth at 90°	85 mm
Cutting depth at 45°	55 mm
Dimensions cast iron table	1077 x 273 mm
Dimensions sliding table	1450 mm x 320 mm
Cutting length	1200 mm
Cutting width parallel fence	600 mm
Motor power 3 phase (S6)	3 kW / 4 hp
Motor power single phase (S6)	2,2 kW / 3 hp
Spindle	
Spindle rotation speed machine 3 phase	3000 / 6000 RPM
Spindle rotation speed single phase	6000 RPM

Diameter spindle arbor	30 mm
Capacity spindle arbor	122 mm
Travel	140 mm
Dimensions table opening	180 mm
Motor power 3 phase (S6)	3 kW / 4 hp
Motor power single phase (S6)	2,2 kW / 3 hp
Planer-Thicknesser	
Total length planer tables	1320 mm
Height capacity thicknesser	230 mm
Diameter cutter block	70 mm
Number of knives	3
Dimensions knives	260 x 25 x 3 mm
Planer thicknesser width	260 mm
Max. depth of cut	4 mm
Feeding speed	6 m/min
Cutter block rotation speed	5500 RPM
Motor power 3 phase (S6)	3 kW / 4 hp
Motor power single phase (S6)	2,2 kW / 3 hp
Mortiser (Option)	
Chuck	0 - 16 mm
Travel	165 x 140 x 85 mm

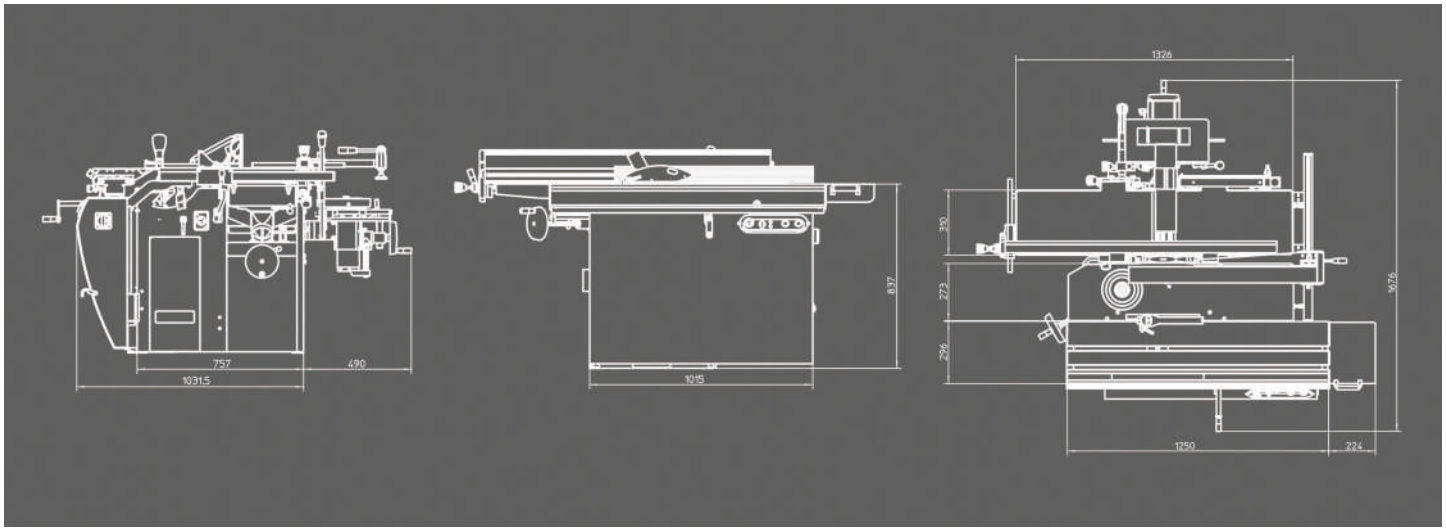

HX310 PRO

HX310 PRO with options

HX310 PRO Technical Data

Weight	539 kg
Voltage	230 V Mono / 230 V - 3 Phase
	400 V - 3 Phase
Dust suction outlet	100 mm
	+ 60mm on sawguard
Saw	
Saw rotation speed	4500 RPM
Diameter saw blade and bore	250 x 30 mm
Cutting depth at 90°	85 mm
Cutting depth at 45°	55 mm
Dimensions cast iron table	1077 x 273 mm
Dimensions sliding table	1450 mm (option 2050 mm)
	x 320 mm
Cutting length	1600 mm (option 2100 mm)
Cutting width parallel fence	640 mm
Motor power 3 phase (S6)	3 kW / 4 hp
Motor power single phase (S6)	2,2 kW / 3 hp
Spindle	
Spindle rotation speed machine 3 phase	3000 / 6000 RPM
Spindle rotation speed single phase	6000 RPM
Diameter spindle arbor	30 mm (option 50 mm)
Capacity spindle arbor	120 mm
Travel	140 mm
Dimensions table opening	180 mm
Motor power 3 phase (S6)	3 kW / 4 hp
Motor power single phase (S6)	2,2 kW / 3 hp
Planer-Thicknesser	
Total length planer tables	1320 mm
Height capacity thicknesser	230 mm
Diameter cutter block	70 mm
Number of knives	3
Dimensions knives	310 x 25 x 3 mm
Planer thicknesser width	310 mm
Max. depth of cut	4 mm
Feeding speed	6 m/min
Cutter block rotation speed	5500 RPM
Motor power 3 phase (S6)	3 kW / 4 hp
Motor power single phase (S6)	2,2 kW / 3 hp
Mortiser (Option)	
Chuck	0 - 16 mm
Travel	165 x 140 x 85 mm

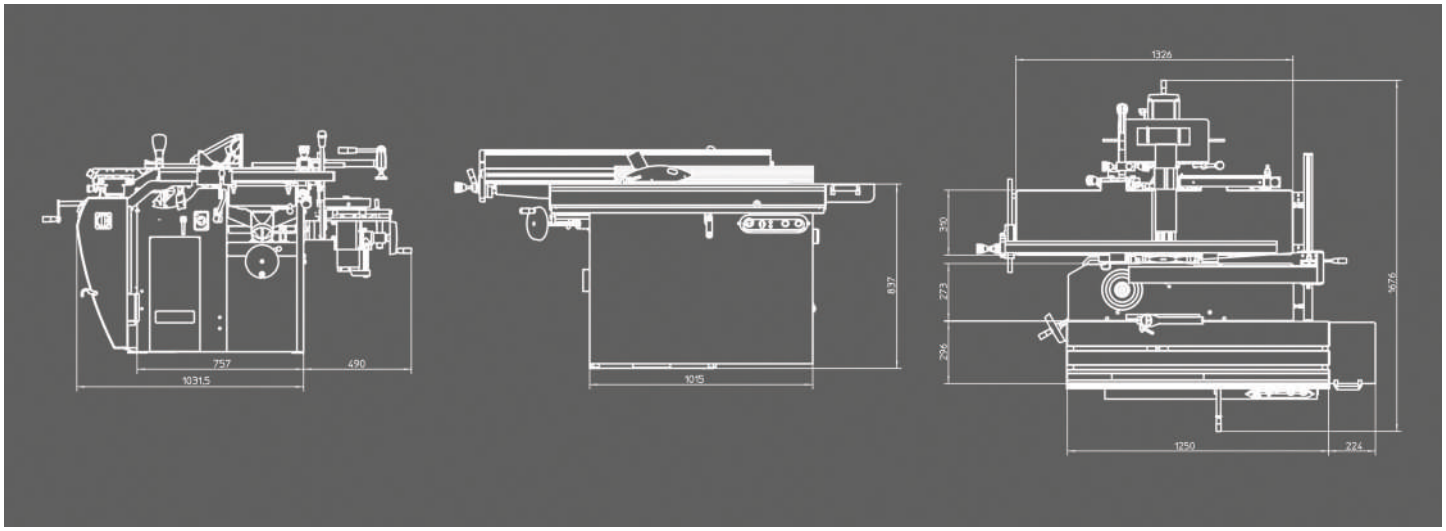

NX310 PRO

NX310 PRO with options

NX310 PRO Technical Data

Weight	550 kg
Voltage	230 V Mono / 230 V - 3 phase
	400 V - 3 phase
Dust suction outlet	100 mm
	+ 60mm on sawguard
Versions	
250 mm sawblade	with scoring unit (100 x 20 mm)
315 mm sawblade	without scoring unit
Saw	
Saw rotation speed	4500 RPM
Diameter saw blade and bore	250 x 30 mm / 315 x 30 mm
Cutting depth at 90°	85 mm / 107 mm
Cutting depth at 45°	55 mm / 70 mm
Dimensions cast iron table	1080 x 410 mm
Dimensions sliding table	1450 mm (option 2050 mm)
	x 320 mm
Cutting length	1600 mm (option 2000/2500 mm)
Cutting width parallel fence	800 mm
Motor power 3 phase (S6)	3,72 kW / 5 hp
Motor power single phase (S6)	2,2 kW / 3 hp

Spindle	
Spindle rotation speed	2900 / 4000 / 6000 / 7500 RPM
Diameter spindle arbor	30 mm (option 50 mm)
Capacity spindle arbor	122 mm
Travel	140 mm
Dimensions table opening	180 mm
Motor power 3 phase (S6)	3,72 kW / 5 hp
Motor power single phase (S6)	2,2 kW / 3 hp
Planer-Thicknesser	
Total length planer tables	1400 mm
Height capacity thicknesser	230 mm
Diameter cutter block	70 mm
Knives	3
Dimensions knives	310 x 25 x 3 mm
Planer thicknesser width	310 mm
Max. depth of cut	4 mm
Feeding speed	6 m/min
Cutter block rotation speed	5500
Motor power 3 phase (S6)	3,72 kW / 5 hp
Motor power single phase (S6)	2,2 kW / 3 hp
Mortiser (option)	
Chuck	0 - 16 mm
Travel	165 x 140 x 85 mm

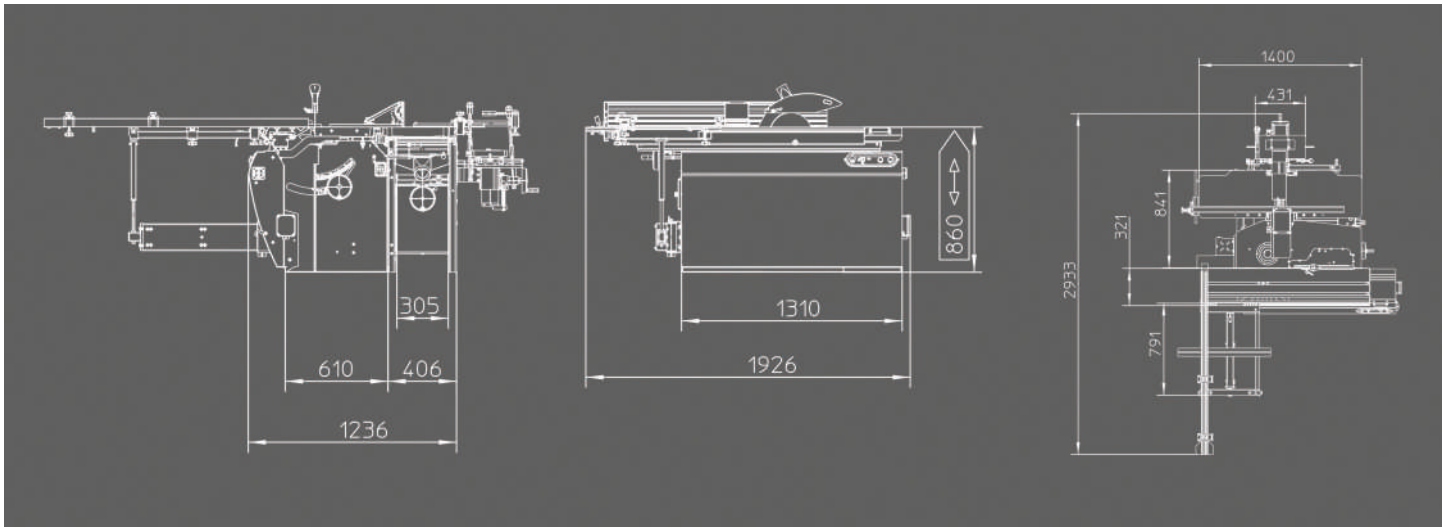

NX410 PRO

NX410 PRO with options

NX410 PRO Technical Data

Weight	640 kg
Voltage	230 V Mono / 230 V - 3 phase
	400 V - 3 phase
Dust suction outlet	100 mm
	+ 60 mm on sawguard
Versions	
250 mm sawblade	with scoring unit (100 x 20 mm)
315 mm sawblade	without scoring unit
Saw	
Saw rotation speed	4500 RPM
Diameter saw blade and bore	250 x 30 mm / 315 x 30 mm
Cutting depth at 90°	85 mm / 107 mm
Cutting depth at 45°	55 mm / 70 mm
Dimensions cast iron table	1080 x 410 mm
Dimensions sliding table	1450 mm (option 2050 mm)
	x 320 mm
Cutting length	1600 mm (option 2000/2500 mm)
Cutting width parallel fence	900 mm
Motor power 3 phase (S6)	4,85 kW / 6,6 hp
Motor power single phase (S6)	2,2 kW / 3 hp

Spindle	
Spindle rotation speed	2900 / 4000 / 6000 / 7500 RPM
Diameter spindle arbor	30 mm (option 50 mm)
Capacity spindle arbor	122 mm
Travel	140 mm
Dimensions table opening	180 mm
Motor power 3 phase (S6)	4,85 kW / 6,6 hp
Motor power single phase (S6)	2,2 kW / 3 hp
Planer-Thicknesser	
Total length planer tables	1800 mm
Height capacity thicknesser	230 mm
Diameter cutter block	70 mm
Knives	3
Dimensions knives	410 x 25 x 3 mm
Planer thicknesser width	410 mm
Max. depth of cut	4 mm
Feeding speed	6 m/min
Cutter block rotation speed	5500
Motor power 3 phase (S6)	4,85 kW / 6,6 hp
Motor power single phase (S6)	2,2 kW / 3 hp
Mortiser (option)	
Chuck	0 - 16 mm
Travel	165 x 140 x 85 mm

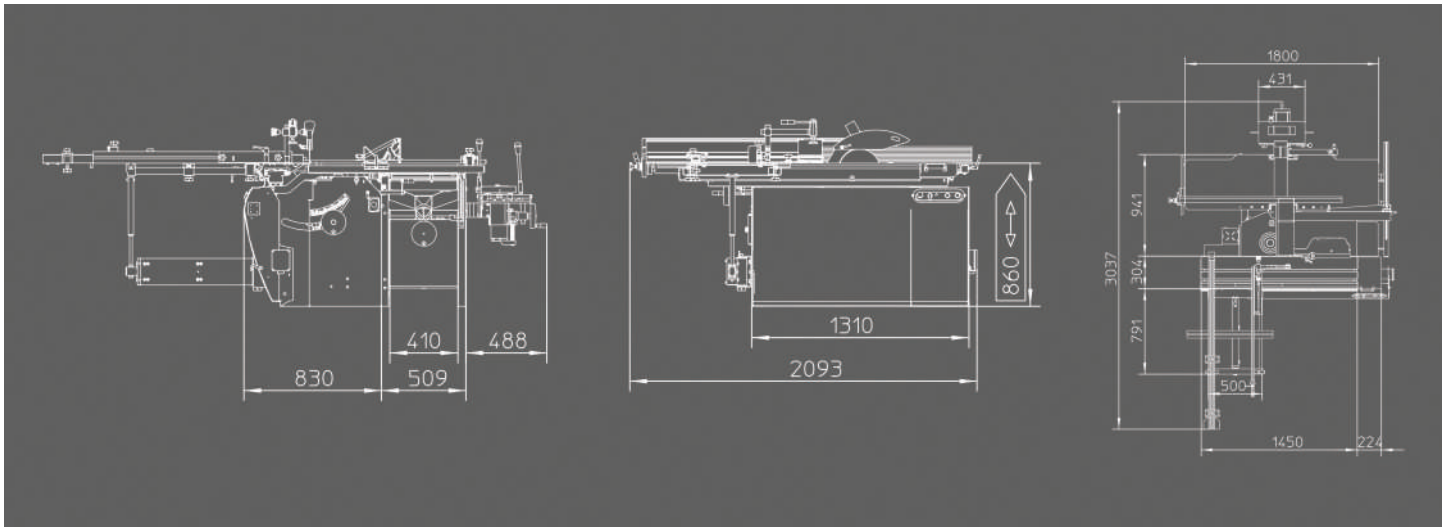

NLX310 PRO

NLX310 PRO with options

NLX310 PRO Technical Data

Weight	835 kg
Tension	230 V Mono / 230 V - 3 Phase
	400 V - 3 Phase
Dust suction outlet	100 mm
	+ 60 mm on saw guard
Saw	
R.P.M.	4500 RPM
Diameter saw blade and bore	300 x 30 mm
Cutting depth at 90°	100 mm
Cutting depth at 45°	70 mm
Dimensions cast iron table	1150 x 350 mm
Dimensions sliding table	2200 mm (option 2800 mm)
	x 320 mm
Cutting length	2500 mm (option 3100 mm)
Cutting width parallel fence	870 mm
Motor power 3 phase (S6)	4,85 kW / 6,6 hp
Motor power single phase (S6)	2,2 kW / 3 hp
Scoring blade	100 x 20 mm
Spindle	
Spindle rotation speed	2900 / 4000 / 6000 / 7500 RPM
Diameter spindle arbor	30 mm (option 50 mm)
Capacity spindle arbor	120 mm
Travel	140 mm
Dimensions table opening	180 mm
Motor power 3 phase (S6)	4,85 kW / 6,6 hp
Motor power single phase (S6)	2,2 kW / 3 hp
Planer-Thicknesser	
Total length planer tables	1400 mm
Height capacity thicknesser	230 mm
Diameter cutter block	70 mm
Number of knives	3
Dimensions knives	310 x 25 x 3 mm
Planer thicknesser width	310 mm
Max. depth of cut	4 mm
Feeding speed	6 m/min
Cutter block rotation speed	5200 RPM
Motor power 3 phase (S6)	4,85 kW / 6,6 hp
Motor power single phase (S6)	2,2 kW / 3 hp
Mortiser (Option)	
Chuck	0 - 16 mm
Travel	165 x 140 x 85 mm

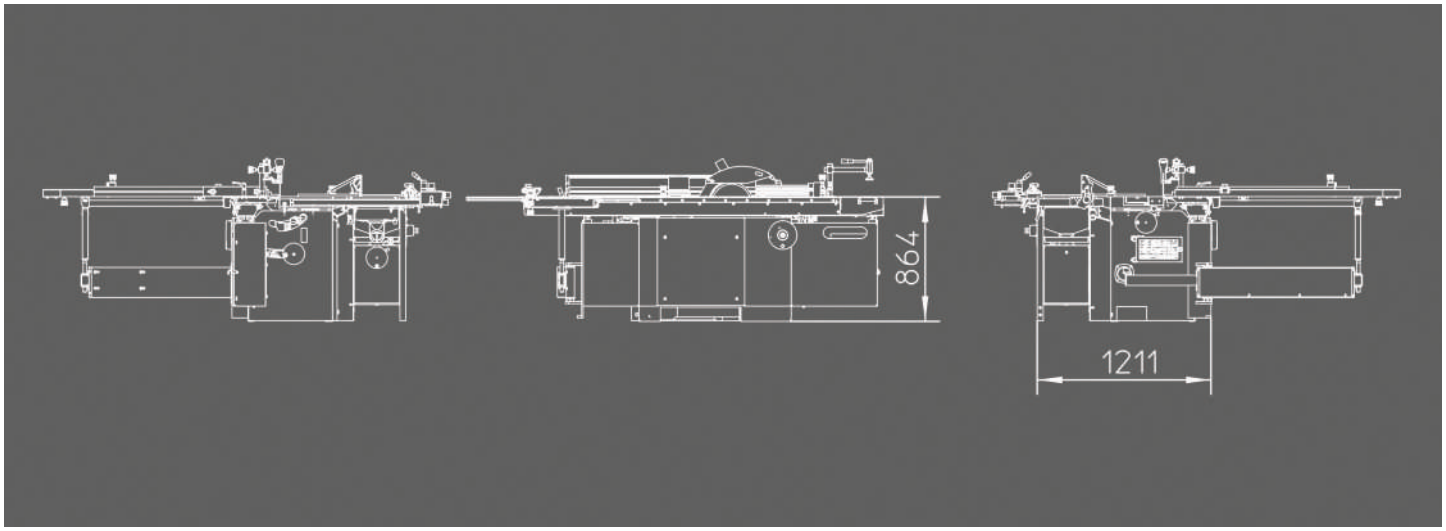

NLX410 PRO

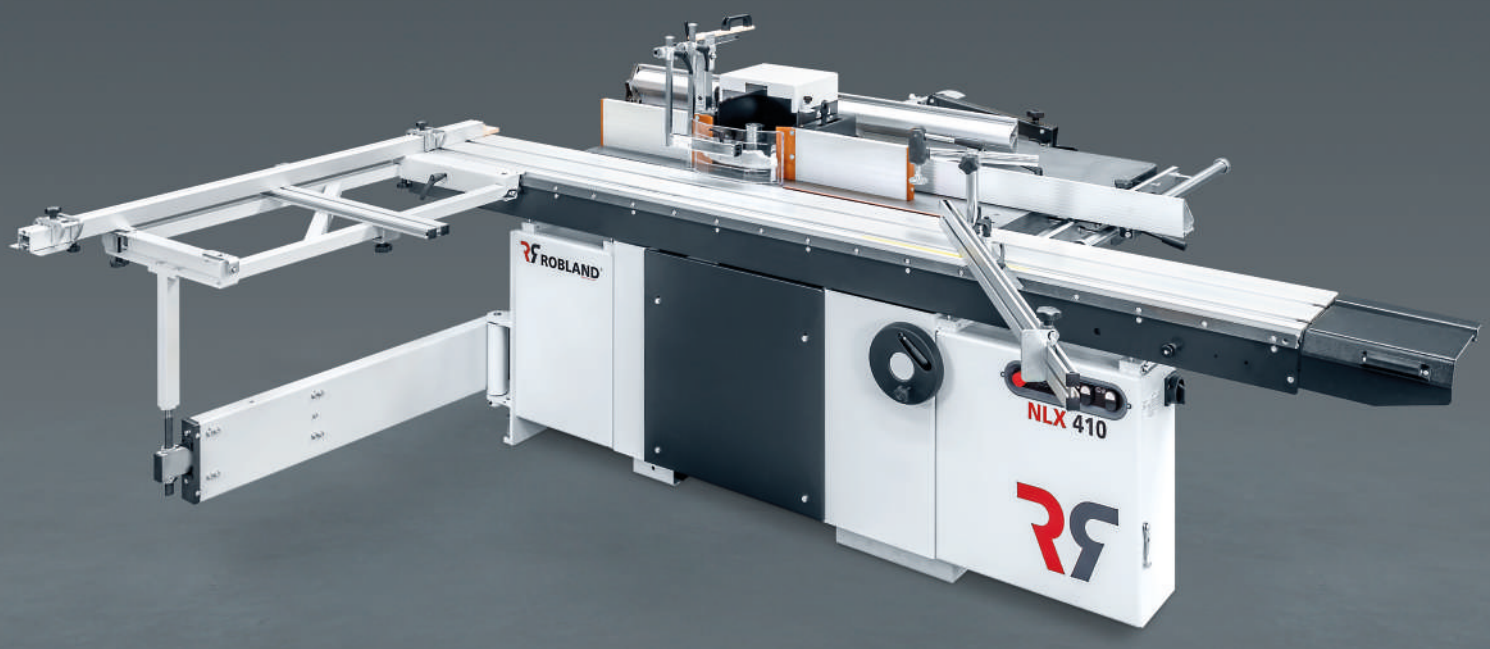

NLX410 PRO with options

NLX410 PRO Technical Data

Weight	850 kg
Voltage	230 V Mono / 230 V - 3 Phase
	400 V - 3 Phase
Dust suction outlet	100 mm
	+ 60 mm on saw guard
Saw	
Saw rotation speed	4500 RPM
Diameter saw blade and bore	300 x 30 mm
Cutting depth at 90°	100 mm
Cutting depth at 45°	70 mm
Dimensions cast iron table	1150 x 350 mm
Dimensions sliding table	2200 mm (option 2800 mm)
	x 320 mm
Cutting length	2500 mm (option 3100 mm)
Cutting width parallel fence	925 mm
Motor power 3 phase (S6)	4,85 kW / 6,6 hp
Motor power single phase (S6)	2,2 kW / 3 hp
Scoring blade	100 x 20 mm
Spindle	
Spindle rotation speed machine 400 V	2900 / 4000 / 6000 / 7500 RPM
Diameter spindle arbor	30 mm (option 50 mm)
Capacity spindle arbor	120 mm
Travel	140 mm
Dimensions table opening	180 mm
Motor power 3 phase (S6)	4,85 kW / 6,6 hp
Motor power single phase (S6)	2,2 kW / 3 hp
Planer-Thicknesser	
Total length planer tables	1800 mm
Height capacity thicknesser	230 mm
Diameter cutter block	70 mm
Number of knives	3
Dimensions knives	410 x 25 x 3 mm
Planer thicknesser width	410 mm
Max. depth of cut	4 mm
Feeding speed	6 m/min
Cutter block rotation speed	5200 RPM
Motor power 3 phase (S6)	4,85 kW / 6,6 hp
Motor power single phase (S6)	2,2 kW / 3 hp
Mortiser (Option)	
Chuck	0 - 16 mm
Travel	165 x 140 x 85 mm

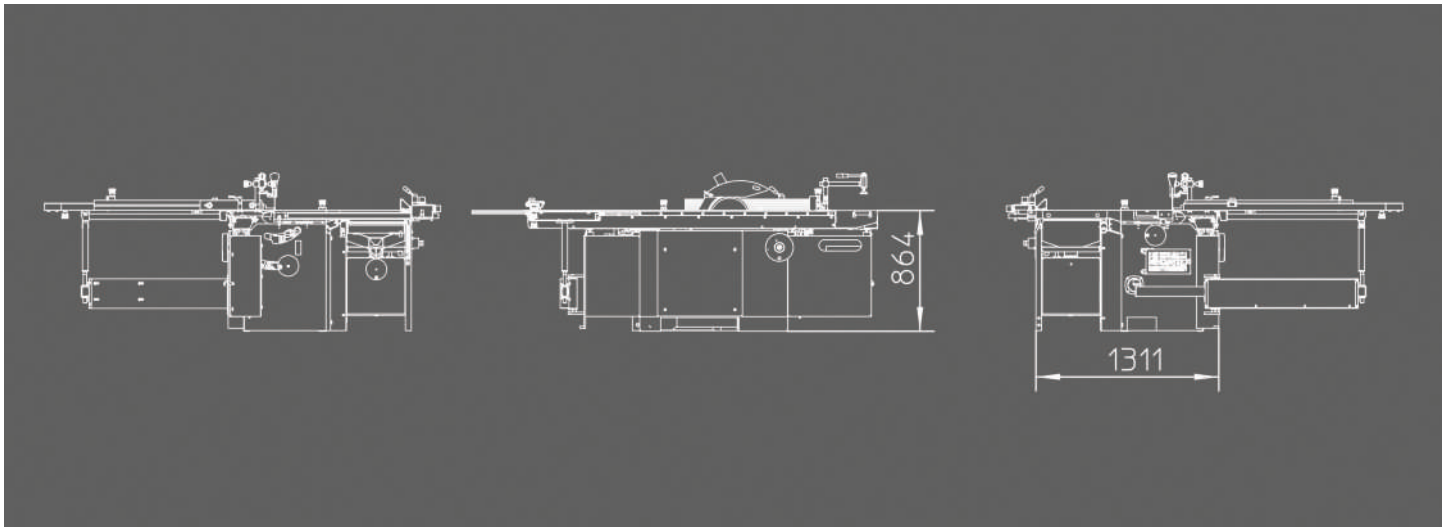

XSD310

XSD310 with options

XSD310 Technical Data

Weight	250 kg
Voltage	230 V Mono / 400 V - 3 Phase
Motor power 3 phase (S6)	3 kW / 4 hp
Motor power single phase (S6)	2,2 kW / 3 hp
Dust suction outlet	100 mm
Planer	
Planer width	310 mm
Total length planer tables	1400 mm
Diameter cutter block	70 mm
Number of knives	3
Dimensions knives	310 x 25 x 3 mm
Rotation speed	5400 RPM
Dimensions planer fence	1300 x 150 mm
Inclination planer fence	90° - 45°
Max. depth of cut	4 mm

Thicknesser	
Dimensions thicknesser table	430 x 310 mm
Height capacity thicknesser	230 mm
Diameter feed rollers	30 mm
Max. depth of cut	4 mm
Feeding speed	6 m/min.
Mortiser (option)	
Chuck	0 - 16 mm
Travel	165 x 140 x 85 mm

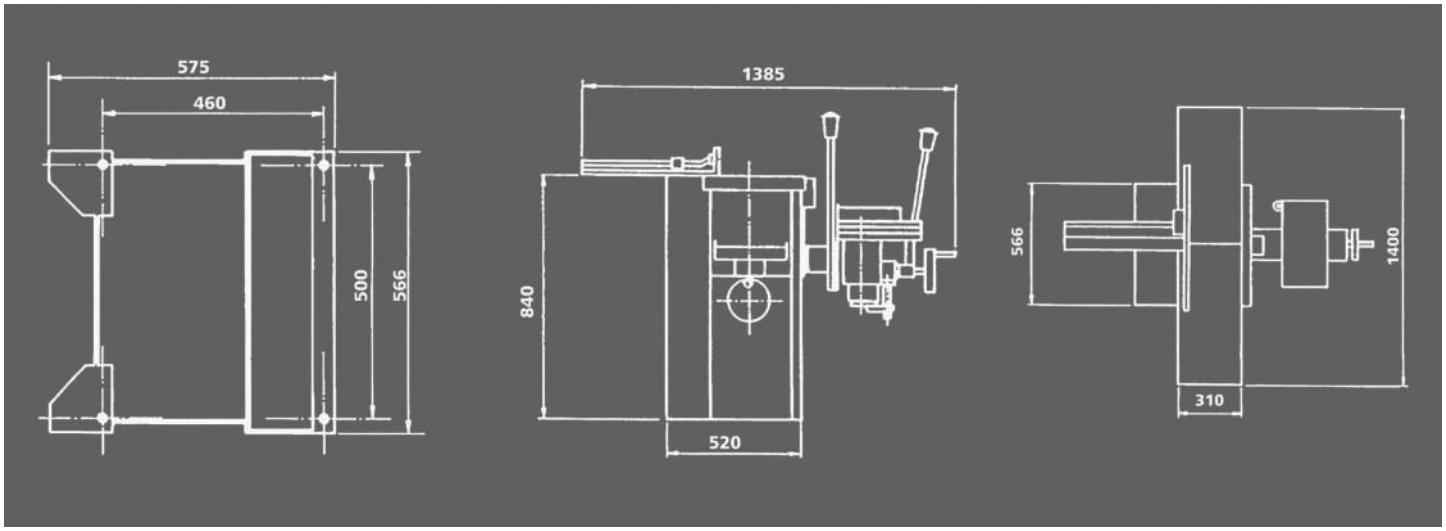

NXSD310

NXSD310 with mortiser

NXSD310 Technical Data

Weight	280 kg
Voltage	230 V Mono / 230 V - 3 Phase
	400 V - 3 Phase
Motor power 3 phase (S6)	3,72 kW / 5 hp
Motor power single phase (S6)	2,2 kW / 3 hp
Dust suction outlet	100 mm

Planer	
Planer width	310 mm
Total length planer tables	1400 mm
Diameter cutter block	70 mm
Number of knives	3
Dimensions knives	310 x 25 x 3 mm
Rotation speed	5500 RPM
Dimensions planer fence	1300 x 150 mm
Inclination planer fence	90° - 45°
Max. depth of cut	4 mm

Thicknesser	
Dimensions thicknesser table	430 x 310 mm
Height capacity thicknesser	230 mm
Diameter feed rollers	30 mm
Max. depth of cut	4 mm
Feeding speed	6 m/min.

Mortiser (Option)	
Chuck	0 - 16 mm
Travel	165 x 140 x 85 mm

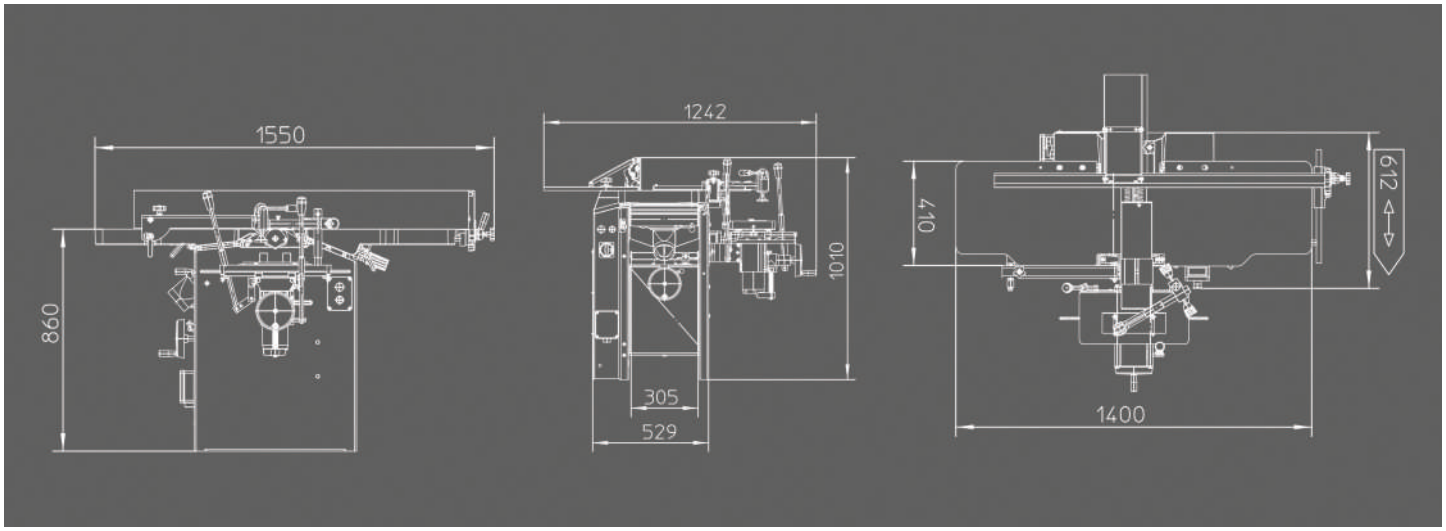

NXSD410

NXSD410

NXSD410 Technical Data

Weight	350 kg
Voltage	230 V Mono / 230 V - 3 Phase
	400 V - 3 Phase
Motor power 3 phase (S6)	4,85kW / 6,6 hp
Motor power single phase (S6)	2,2 kW / 3 hp
Dust suction outlet	100 mm

Planer	
Planer width	410 mm
Total length planer tables	1800 mm
Diameter cutter block	70 mm
Knives	3
Dimensions knives	410 x 25 x 3 mm
Rotation speed	5500 RPM
Dimensions planer fence	1500 x 15 mm
Inclination planer fence	90° - 45°
Max. depth of cut	4 mm

Thicknesser	
Dimensions thicknesser table	600 x 410 mm
Height capacity thicknesser	230 mm
Diameter feed rollers	30 mm
Max. depth of cut	4 mm
Feeding speed	6 m/min.

Mortiser (Option)	
Chuck	0 - 16 mm
Travel	165 x 140 x 85 mm

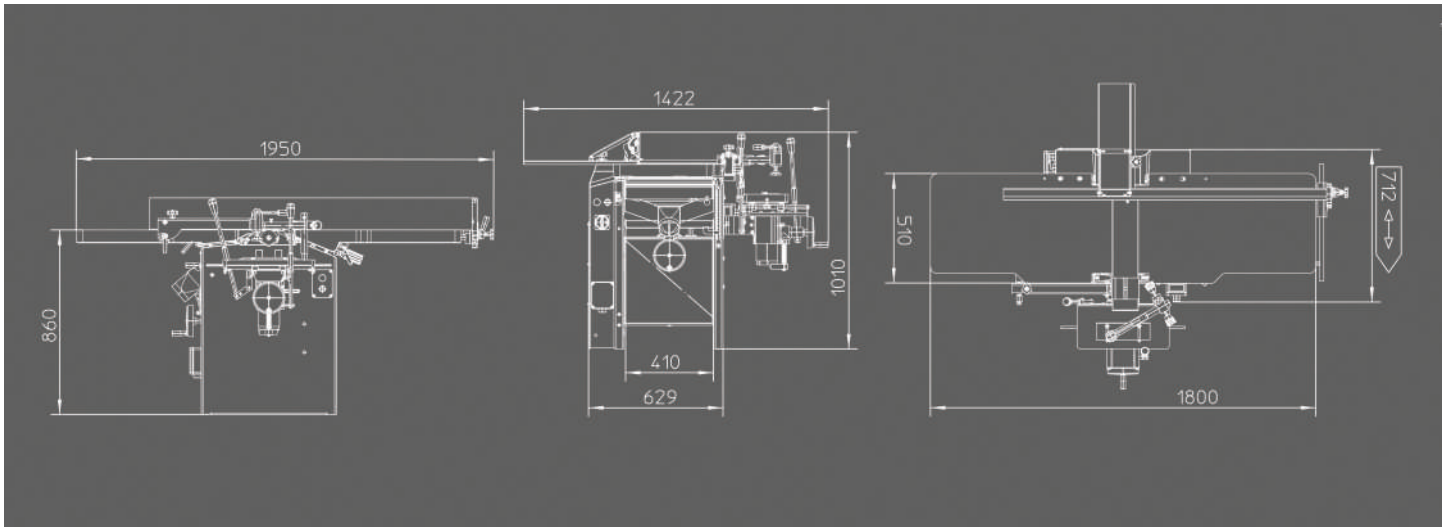

HXTZ

HXTZ with options

HXTZ Technical Data

Weight	340 kg
Voltage	230 V Mono / 230 V - 3 Phase
	400 V - 3 Phase
Dust suction outlet	100 mm
	+ 60mm on sawguard
Saw	
Saw rotation speed	4500 RPM
Diameter saw blade and bore	250 x 30 mm
Cutting depth at 90°	85 mm
Cutting depth at 45°	55 mm
Dimensions cast iron table	1077 x 273 mm
Dimensions sliding table	1450 mm x 320 mm
Cutting length	1200 mm
Cutting width parallel fence	660 mm
Motor power 3 phase (S6)	2.94 kW / 4 hp
Motor power single phase (S6)	2,2 kW / 3 hp

Spindle	
Spindle rotation speed machine 400 V	3000 / 6000 RPM
Spindle rotation speed single phase	6000 RPM
Diameter spindle arbor	30 mm
Capacity spindle arbor	120 mm
Travel	140 mm
Dimensions table opening	180 mm
Motor power 3 phase (S6)	2.94 kW / 4 hp
Motor power single phase (S6)	2,2 kW / 3 hp

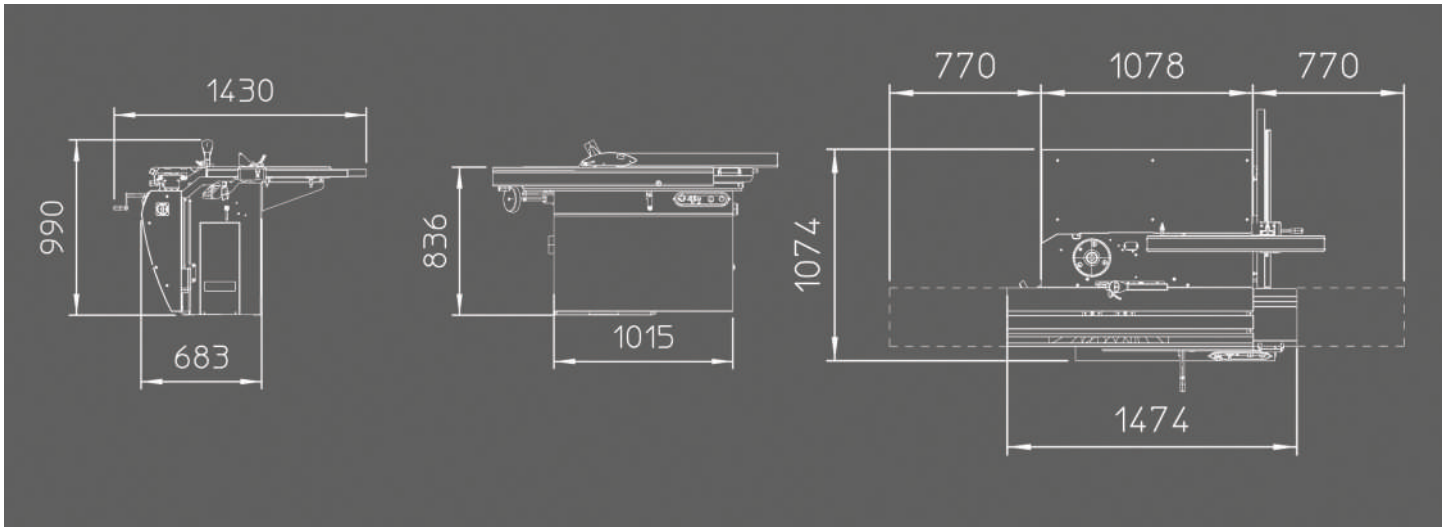

NXTZ

NXTZ with options

NXTZ Technical Data

Weight	395 kg
Voltage	230 V Mono / 230 V - 3 Phase
	400 V - 3 Phase
Dust suction outlet	100 mm
	+ 60 mm on saw guard
Versions	
250 mm	with scoring unit (100 x 20 mm)
315 mm	without scoring unit
Saw	
Saw rotation speed	4500 RPM
Diameter saw blade	250 x 30 mm - 315 x 30 mm
Cutting depth at 45° / 90° (250 / 315)	55 mm/85 mm - 65mm / 107mm
Dimensions table	1080 x 410 mm
Dimensions sliding table	1450 mm (option 2050 mm)
	x 320 mm
Cutting length	1600 mm (option 2500 mm)
Cutting width parallel fence	900 mm (option 1350 mm)
Motor power 3 phase (S6)	3,72 kW / 5 hp
Motor power single phase (S6)	2,2 kW / 3 hp

Spindle	
Spindle rotation speed machine 400 V	2900 / 4000 / 6000 / 7500 RPM
Spindle rotation speed single phase	2900 / 4000 / 6000 / 7500 RPM
Diameter spindle arbor	30 mm (option 50mm)
Capacity spindle arbor	120 mm
Travel	140 mm
Dimensions table opening	180 mm
Motor power 3 phase (S6)	3,72 kW / 5 hp
Motor power single phase (S6)	2,2 kW / 3 hp

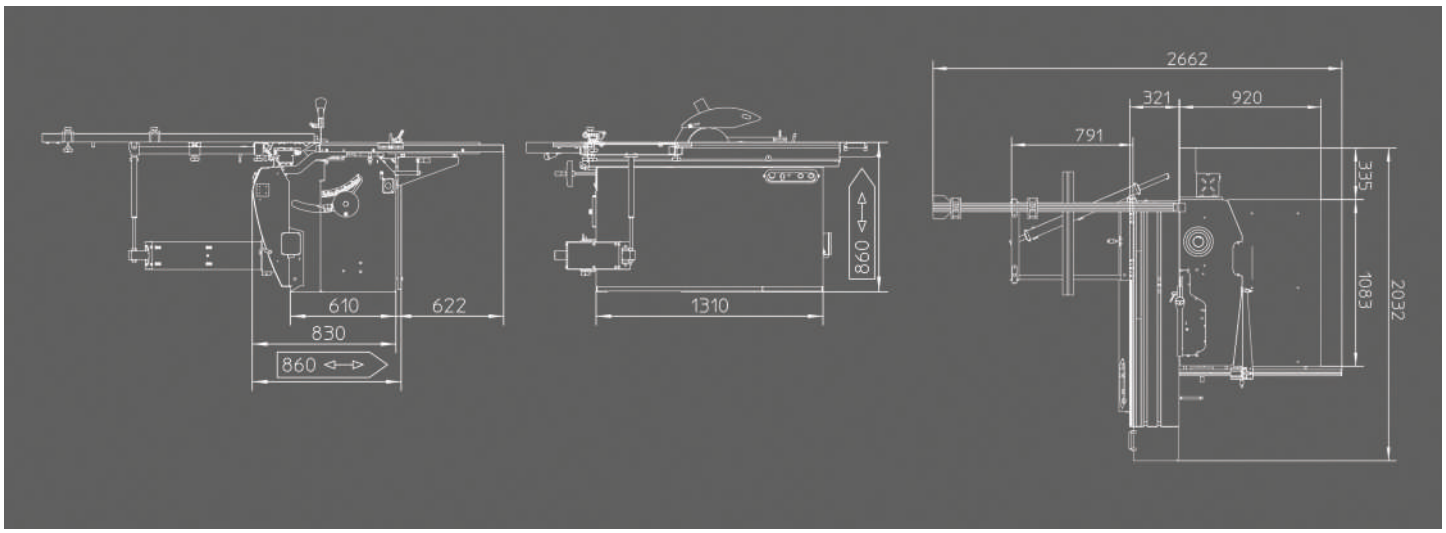

NLXTZ

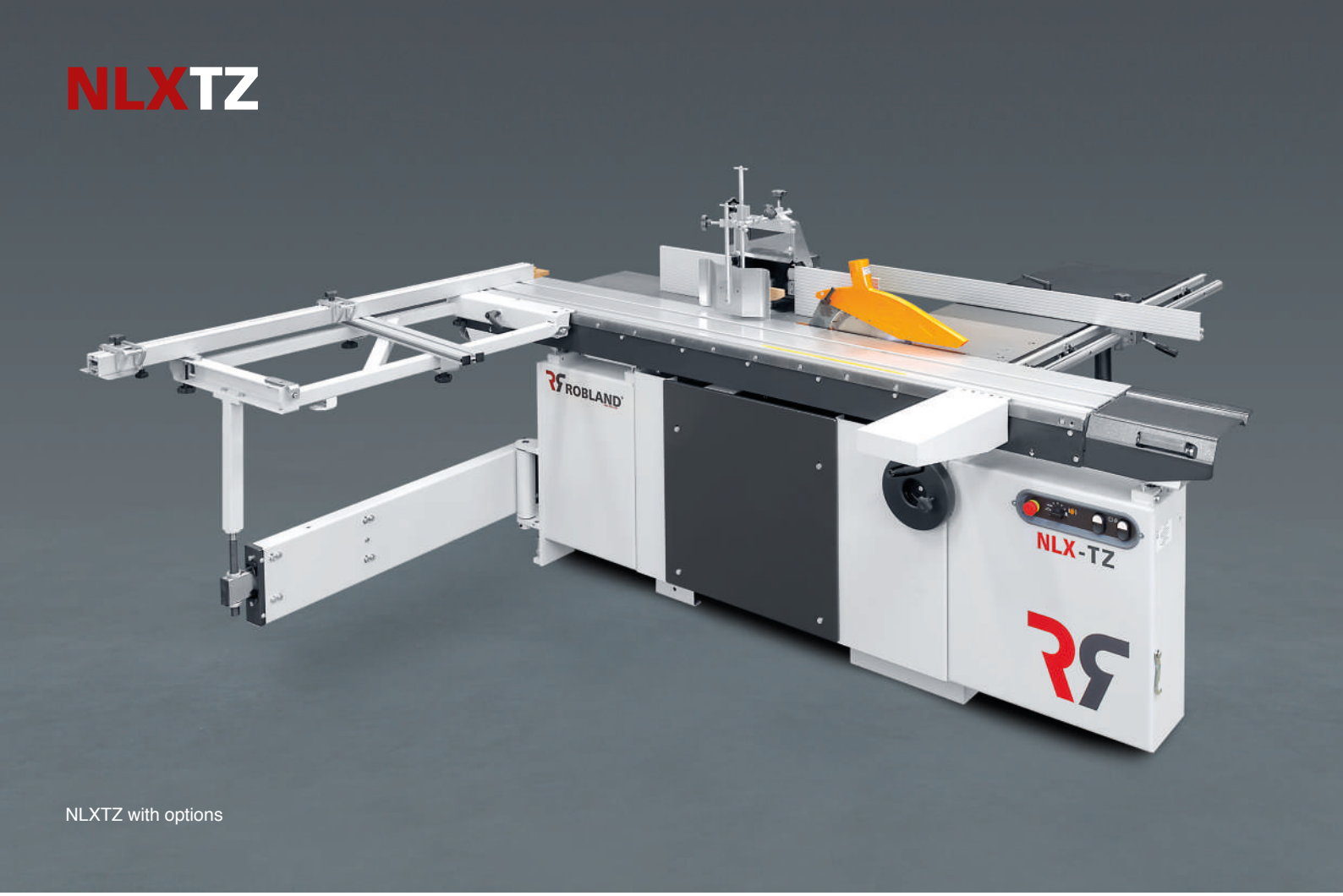

NLXTZ with options

NLXTZ Technical Data

Weight	420 kg
Voltage	230 V Mono / 230 V - 3 Phase
	400 V - 3 Phase
Dust suction outlet	100 mm
	+ 60 mm on saw guard
Saw	
Saw rotation speed	4500 RPM
Diameter saw blade and bore	300 mm max x 30 mm
Cutting depth at 90° / 45°	100 mm / 70 mm
Dimensions cast iron table	1150 x 350 mm
Dimensions sliding table	2200 mm (option 2800 mm)
	x 380 mm
Cutting length	2500 mm (option 3100 mm)
Cutting width parallel fence	900 mm (option 1350 mm)
Motor power 3 phase (S6)	4,85 kW / 6,6 hp (S6)
Motor power single phase	2,2 kW / 3 hp
Scoring saw	
Diameter saw blade and bore	100 x 20 mm
Rotation speed scoring saw	8200 RPM
Motor power 3 phase (S6)	0,56 kW / 0,75 hp

Spindle	
Spindle rotation speed	2900 / 4000 / 6000 / 7500 RPM
Diameter spindle arbor	30 mm (option 50 mm)
Capacity spindle arbor	120 mm
Travel	140 mm
Dimensions table opening	180 mm
Motor power 3 phase (S6)	4,85 kW / 6,6 hp (S6)
Motor power single phase (S6)	2,2 kW / 3 hp

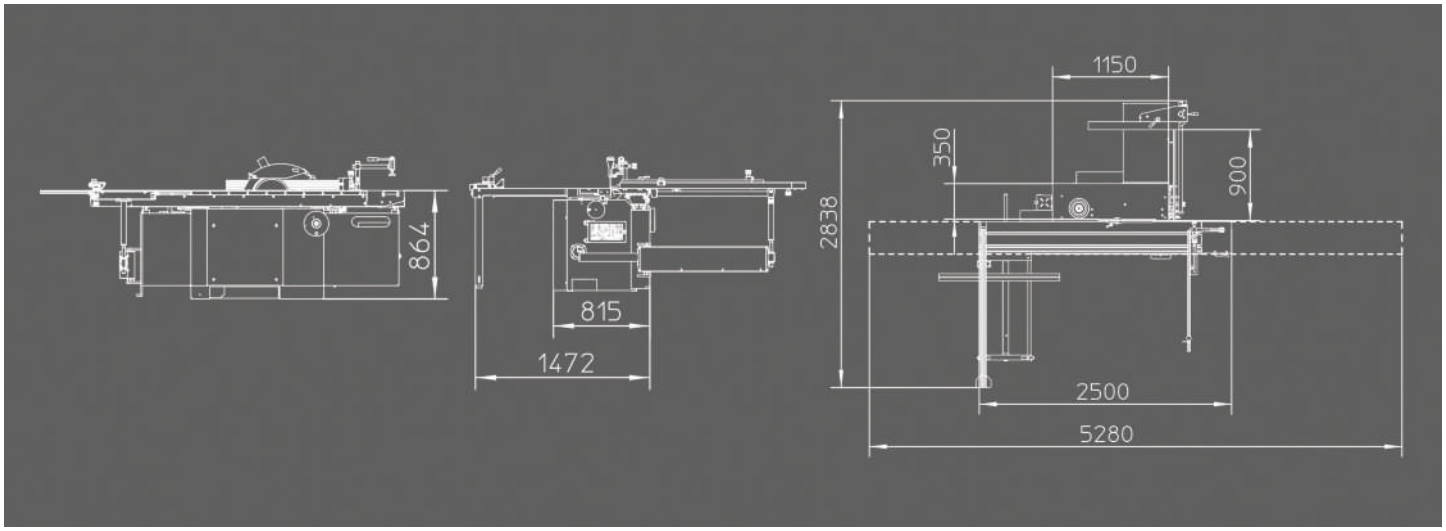

STRENGTHS

Combination machines have the advantage of bringing you all operations (saw, spindle moulder, tenoning, planer, thicknesser and mortiser) in a compact way and at a low budget.

With modern Robland design changing over from one operation to another is both easy and fast. Spareparts are still available multiple years after the product launch. Robland combination machines are designed by the same engineers and built in the same Belgian factory as our more industrial equipment.

Customizing your combination machine is also a possibility with Robland. You can either opt for a full combination machine offering you 4 (saw, spindle, moulder and planer thicknesser) till 6 (with extra tenoning and mortiser) operations or decide to split these operations into two machines: TZ and SD

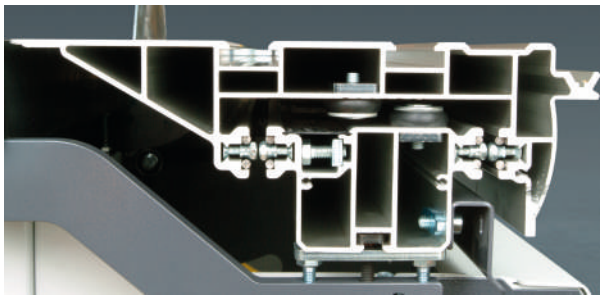

ALUMINIUM SLIDING TABLE WITH BOSS

The aluminium sliding table is completely anodized for better hardness and protection. The Robland bearing system with hard steel balls rolling on hardened steel round bars (BOSS) and automatic cleaning system ensures a smooth operation. The design of the profiles ensures a very high torsion and rigidity. In combination with the metallic ball cage it guarantees that the sliding table can easily take heavy loads for many years.

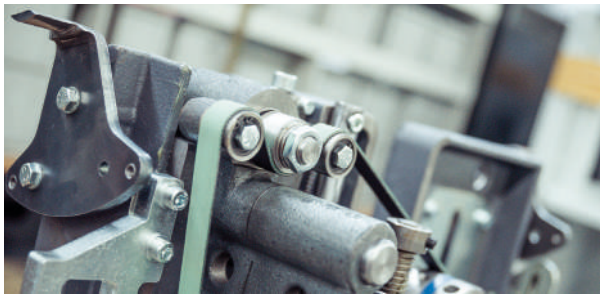

SAW AGGREGATE

The saw aggregate of the NX and NLX series rotates on shells for a smooth high precision movement.

OUTRIGGER TABLE

On the HX PRO, NX and NLX series the strong outrigger table is supported by a sturdy telescopic swinging arm guaranteeing precision even with heavy loads.

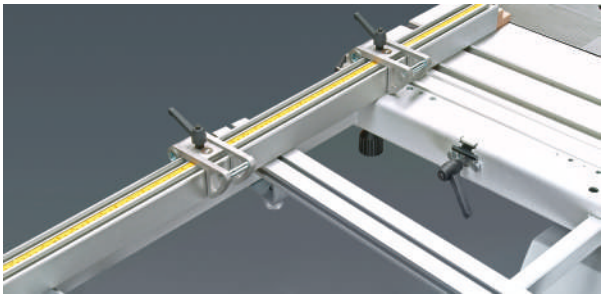

CROSS CUT FENCE

Even our entry-level HX310 PRO uses a sturdy aluminium profile for its cross cut fence.

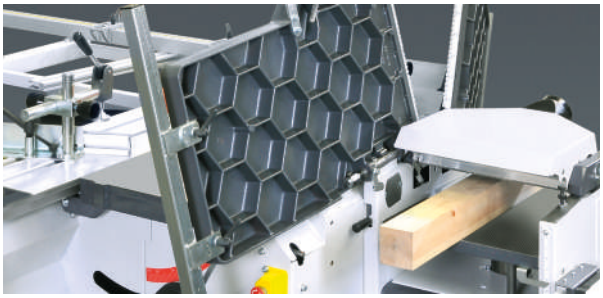

CAST IRON TABLES

Heavy cast iron tables with a honeycomb structure (on NX and NLX models) and scraped surface guarantee stability and precision for a life-time.

The planer tabels open up like butterfly wings offering easy access to the thicknesser.

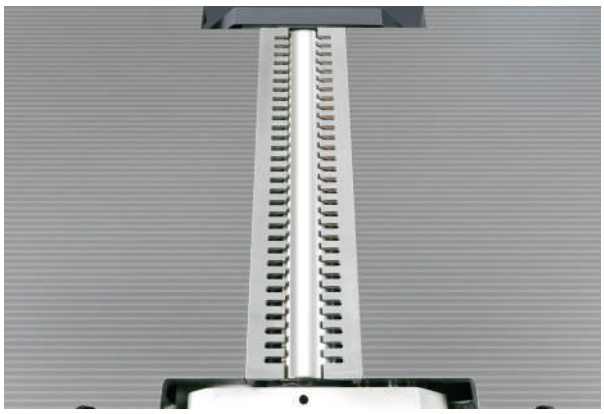

ENHANCED COMFORT

The microgrooves in the table surface allow for a smooth gliding of the wood while the perforations near the cutter block decrease the noise level significantly.

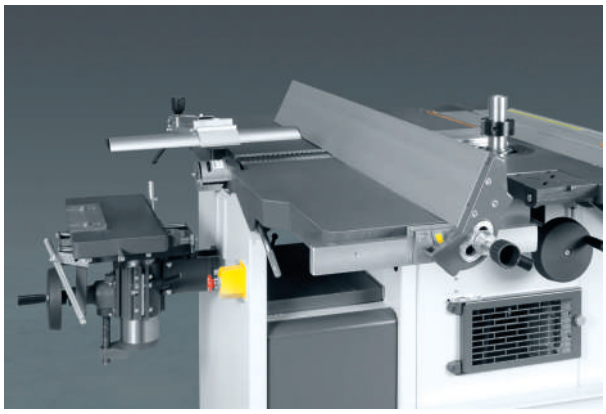

LARGE STRONG PLANER FENCE

The large, hard anodized, planer fence makes edge planing easy. Thanks to its special swivel-support bracket, the fence sets at any angle without a gap between the fence and the table surface.

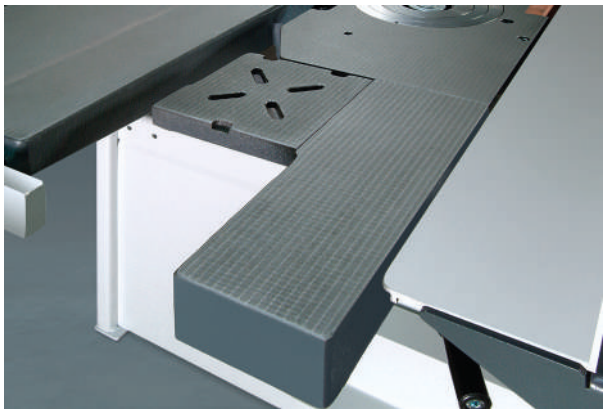

TABLE EXTENSION & SUPPORT TABLE FOR POWER FEEDER

The cast iron table extension provides additional support while moulding.

The cast iron “fold away” support table allows for quick and easy mounting of the power feeder. (Standard on NX and NLX series, option on HX series.)

ANTI-TORSION TUBE

An anti-torsion tube filled with concrete offers increased rigidity to the frame, absorbs vibrations and functions as a counterweight for the load of the sliding table.

OPTIONS

ANALOGUE READOUT FOR THICKNESSER

Handwheel with integrated analogue readout for the thicknesser table. This mechanical readout offers even more comfort and precision than the standard ruler.

ANALOGUE READOUT FOR SPINDLE-MOULDER

The handwheel with integrated analogue readout indicating the height of the spindle moulder.

TERSA CUTTER BLOCK

The tersa cutter block (not on HX260) for very fast exchange of the blades.

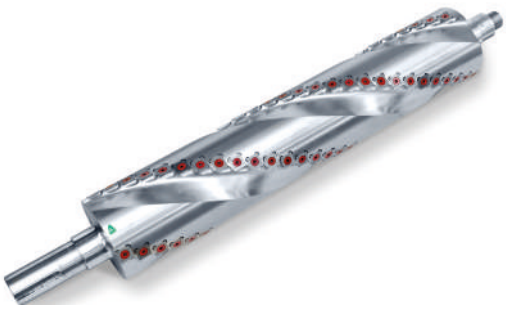

SPIRAL CUTTER BLOCK

The spiral cutter block (not on HX260) for lower noise level on hardwood.

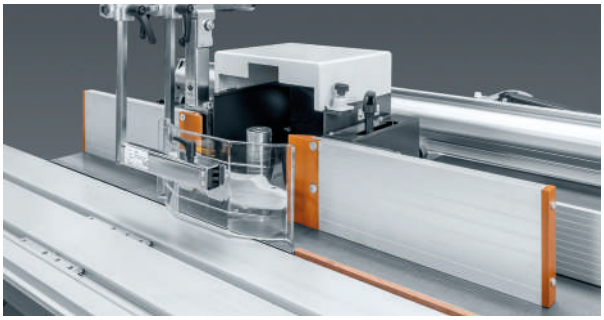

HEAVY DUTY TOP CAP

On the NLX type of machines it is possible to mount on the spindle moulder a heavy duty top cap moving on linear guidings for a better repeatability and more effective dust extraction. This heavy duty top cap also accepts tools with a large diameter.

WHEEL SET

With the wheel system consisting of two fixed wheels at one side and a swiveling wheel with steering handle at the other, you can easily move your machine. (not available on the NLX Pro)

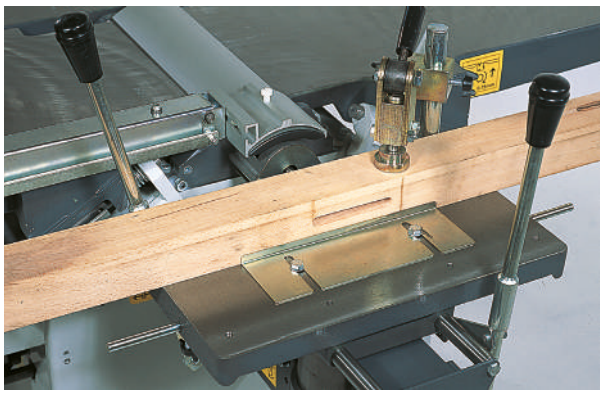

MORTISING UNIT

The mortising unit consits of a sliding cast iron table and a wood clamp. Two control levers allow for comfortable handling. Limiters can be set to guarantee the right dimensions.

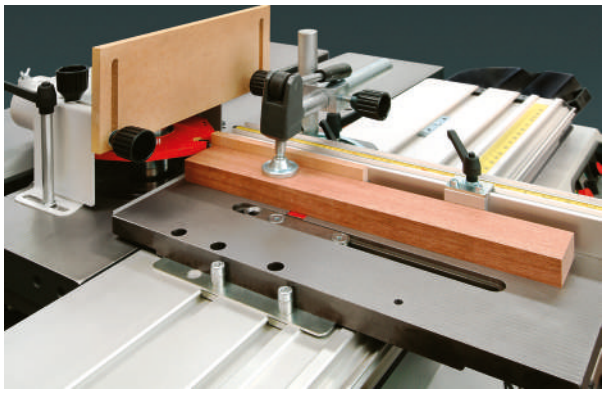

TENONING

The tenoning safety hood and cast iron tenoning table with fence and wood clamp enable you to execute your tenoning work in all safety. The safety hood for tenoning accomodates for tooling with a diameter up to 260 mm.

SUPPORT TABLE

The extra support table on the sliding table facilitates the processing of big panels.

ACCESSORIES

RAV32 - BASIC MODEL FEEDER

- 3 feeding rolls diam 80 x 28 mm
- 4 speeds: 5/6,5/8/11 m/min
- Arm length 700 mm
- Weight: 33kg

SUPPORT ROLLER

Support roller with cylindrical roller and balls.

A foot pedal allows for easy height adjustment.

DUST COLLECTOR

DC1300 - 1,5 kW / 3 x 400V or 1,5kW single phase
- 2500 m³/h
- 1 bag diameter 500 mm x 800 mm height
- Box dimensions: 920 x 580 x 580 mm
- Weight: 50 kg

DUST COLLECTOR

DC2300 - 2,2 kW / 3 x 400V or 2,2kW single phase
- 3900 m³/h
- 2 x bags diameter 500 mm x 800 mm height
- Box dimensions: 170 x 560 x 570
- Weight: 64 kg

LBM

LBM with options

LBM Technical Data

Weight	150 kg
Motor power	2,2 kW / 3 HP
Tabletop size	600 x / 300 mm
Horizontal movement	180 mm
Maximal drilling depth	150 mm
Vertical movement of the head	145 mm
Chuck with clamping range of	16 mm
RPM	3000

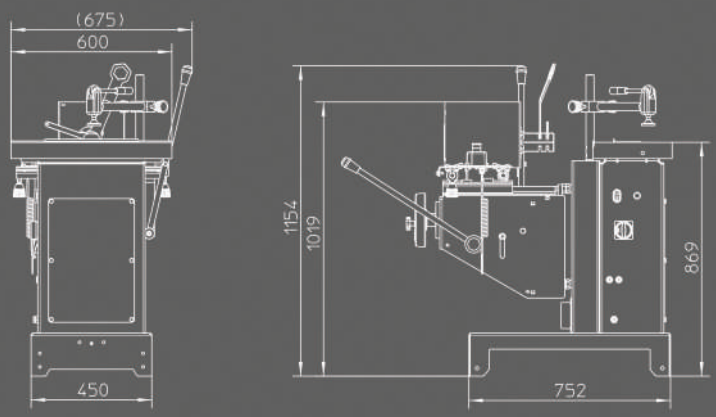

COMBINED MACHINES
OVERVIEW

COMBINED 4 – 6 operations

	HX260	HX310 PRO	NX310 PRO (315)
Optional tenoner and mortiser	O	O	O
Machine in monophase	O	O	O
Outrigger table	-	S	S
Mitre fence with excentric clamp	S	S	S
Motors			
Number of motors	3	3	3
Motor power (S6, 40% duty cycle) for 3 phase	3 kW	3 kW	3,7 kW
Motor power (S6, 40% duty cycle) for single phase	2,2 kW	2,2 kW	2,2 kW
Saw			
Scoring unit	-	-	-
Diameter main saw (mm)	250	250	315
Max cutting depth 90° (mm)	85	85	107
Max cutting length standard (mm)	1200	1450	1600
Max cutting length optional (mm)	-	2100	2500
Max cutting width standard with paralel fence (mm)	600	655	800
Parallel fence on round bar	-	-	-
Digital read out on flippers and parallel fence	-	-	-
Spindle Moulder			
Diameter standard (mm)	30	30	30
Diameter optional (mm)	-	50	1 1/4" / 32 /50
Speed (1000 rpm)	3/6	3/6	3/4/6/7,5
Fold away power feeder support table	O	O	S
Heavy duty topcap on linear guidings	-	-	-
Ring guard fence	O	O	O
Planer thicknesser			
Width of cutterblock (mm)	260	310	310
Cutterblock with resharpable blades	S	S	S
Tersa cutter block	-	O	O
Spiral cutter block	-	O	O

	HXTZ	NXTZ(315)
Optional tenoner	O	O
Optional mortiser	-	-
Machine in monophase	O	O
Outrigger table	-	S
Mitre fence with excentric clamp	S	S
Motors		
Number of motors	2	2
Motor power (S6, 40% duty cycle)	3 kW	3,7 kW
Saw		
Scoring unit	-	-
Diameter main saw (mm)	250	315
Max cutting depth 90° (mm)	85	107
Max cutting length standard (mm)	1200	1600
Max cutting length optional (mm)	2100	2500
Max cutting width standard with paralel fence (mm)	600	900
Max cutting width optional with paralel fence (mm)	-	1250
Parallel fence on round bar	-	S
Digital read out on flippers and parallel fence	-	-
Spindle Moulder		
Diameter standard (mm)	30	30
Diameter optional (mm)	-	1 1/4" / 32 /50
Speed (1000 rpm)	3/6	3/4/6/7,5
Fold away power feeder support table	O	S
Heavy duty topcap on linear guidings	-	-
Ring guard fence	O	O
Planer thicknesser		
Width of cutterblock (mm)	-	-
Cutterblock with resharpable blades	-	-
Tersa cutter block	-	-
Spiral cutter block	-	-

S = Present / O = Optional / - = Not available

NX310 PRO (250)	NX410 PRO (315)	NX410 PRO (250)	NLX310 PRO	NLX410 PRO
O	O	O	O	O
O	O	O	-	-
S	S	S	S	S
S	S	S	S	S
3	3	3	3 + 1	3 + 1
3,7 kW	4,4 kW	4,4 kW	4,4 kW + 0,6 kW	4,4 kW + 0,6 kW
2,2 kW	2,2 kW	2,2 kW	2,2 kW + 0,6 kW	2,2 kW + 0,6 kW
S	-	S	S	S
250	315	250	300	300
85	107	85	100	100
1600	1600	1600	2500	2500
2500	2500	2500	3100	3100
800	800	800	800	900
-	-	-	S	S
-	-	-	O	O
30	30	30	30	30
1 1/4” / 32 /50	1 1/4” / 32 /50	1 1/4” / 32 /50	1 1/4” / 32 /50	1 1/4” / 32 /50
3/4/6/7,5	3/4/6/7,5	3/4/6/7,5	3/4/6/7,5	3/4/6/7,5
S	S	S	S	S
-	-	-	O	O
O	O	O	O	O
310	410	410	310	410
S	S	S	S	S
O	O	O	O	O
O	O	O	O	O

NXTZ(250)	NLXTZ	XSD310	NXSD310	NXSD 410
O	O	-	-	-
-	-	O	O	O
O	-	O	O	O
S	S	-	-	
S	S	-	-	
2	2 + 1	1	1	
3,7 kW	4,4 kW + 0,6 kW	3,4 kW	3,7 kW	4,4kW
S	S	-	-	-
250	300	-	-	-
85	100	-	-	-
1600	2500	-	-	-
2500	3100	-	-	-
900	900	-	-	-
1250	1250	-	-	-
S	S	-	-	-
-	O	-	-	-
30	30	-	-	-
1 1/4” / 32 /50	1 1/4” / 32 /50	-	-	-
3/4/6/7,5	3/4/6/7,5	-	-	-
S	S	-	-	-
-	O	-	-	-
O	O	-	-	-
-	-	310	310	410
-	-	S	S	S
-	-	O	O	O
-	-	O	O	O

PANEL SAWS

NXZ

E300

E2500

Z300 SERIES

Z400 SERIES

Z500 SERIES

PLANER - THICKNESSERS

NXSD310

NXSD410

SD410

PLANERS

SD510

S410

J510

THICKNESSERS

D510

D630

HORIZONTAL SLOT MORTISER

LBM

SPINDLE - MOULDERS

T120S

T120L

T120P

T110i

TABLE SAW

M500

COMBINED MACHINES

HX260

HX310 PRO

NX310/410 PRO

NLX310/410 PRO

NXTZ PRO

NLXTZ PRO

DRILLING MACHINES

BM21 PRO

BM3000

EDGEBANDERS

ALPHA

KM575

This brochure is for information purposes only. Robland reserves the right to modify machine configurations and specifications without prior notice. Standard configurations can change over time and by point of purchase. Please consult your local dealer for accurate and up to date information.

Robland NV
Kolvestraat 44
8000 Brugge - Belgium
Tel: +32 50 458 925
info@robland.com
www.robland.com

Follow us on Facebook
www.facebook.com/Roblandmachines

Follow us on Instagram
www.instagram.com/robland_nv

Follow us on YouTube
www.youtube.com/robland